Bear Valley Electric Service
P.O. BOX 1547 42020 GARSTIN DR BIG BEAR LAKE, CA. 92315
A Division of Golden State Water Company
Telephone: (909) 866-4678
Engineering and Trench Inspections: Ext. #141
Service Connection & Scheduling: Ext: #161
Website: www.bves.com

SERVICE MAST GUYING EXAMPLE

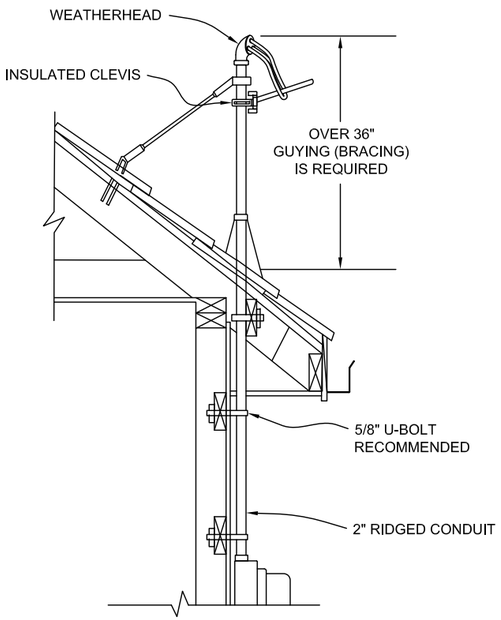

BVES does not allow any foreign attachments to the rigid galvanized steel riser.

ALTERNATE MAST GUYING EXAMPLES

(See Note L)

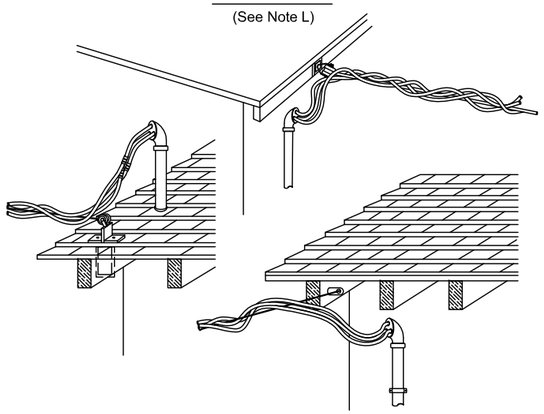

PERMANENT OVERHEAD SERVICE EXAMPLE

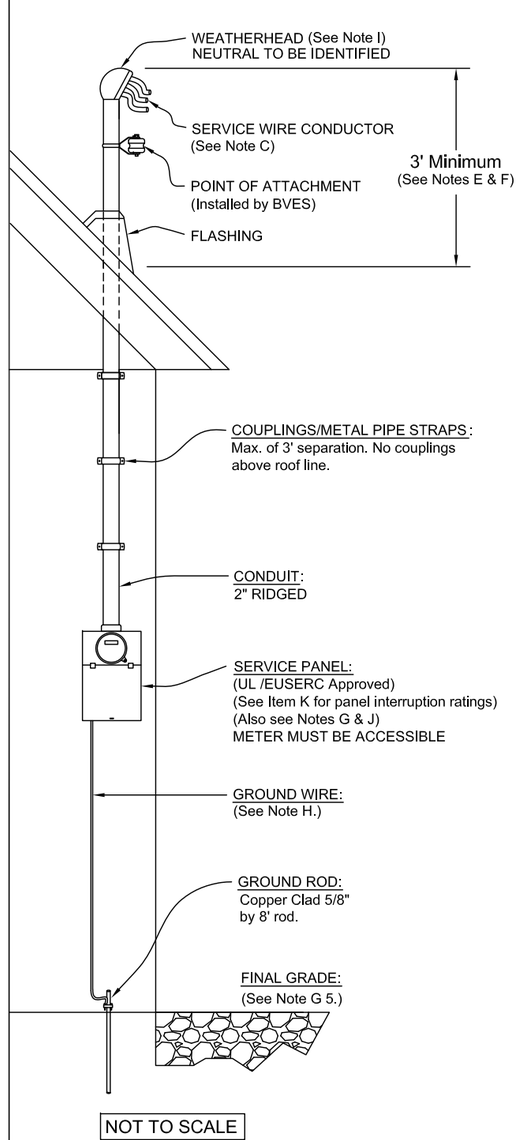

NOT TO SCALE

Bear Valley Electric Service
P.O. BOX 1547 42020 GARSTIN DR BIG BEAR LAKE, CA. 92315
A Division of Golden State Water Company
Telephone: (909) 866-4678
Engineering and Trench Inspections: Ext. #141
Service Connection & Scheduling: Ext: #161
Website: www.bves.com

Minimum Requirements - Permanent Overhead Service

A.) A **"Preliminary Service Request"** is mandatory on all new services, and panel upgrades.
A BVES Engineering Representative must pre-approve all meter locations and grounding contingent upon plot plans and field meets.
All commercial panels to be reviewed and approved by a BVES Engineering Representative.
Always contact BVES to arrange for a meter spot.

B.) Meter shall be located on an exterior wall, facing, or at an angle to the utility pole line. Not to exceed 3' from the nearest corner. Location is subject to approval by a BVES Engineering representative.

C.) Facilities to be installed by customer include the meter panel, grounding, min. 2" rigid steel riser, weatherhead, and service entrance conductor wire (needs to be extended a min. of 18" out of weatherhead).

MINIMUM WIRE SIZES: (Residential)
1.)100 amp panel - #4 copper or #2 aluminum (Insulated) 600Volt Rating
2.) 200 amp panel - #2/0 copper or 4/0 aluminum (Insulated) 600 Volt Rating
BVES will install the service drop, meter, and connection at the weatherhead.

D.) Inspections and Permits must be obtained from the following agencies, depending on service location:

City of Big Bear Lake
39707 Big Bear Blvd
Big Bear Lake, CA 92315
(909) 866-5831

or: **County of San Bernardino**
477 Summit Blvd.
Big Bear Lake, CA 92315
(909) 866-0170

It is the customer's responsibility to notify and supply BVES with a "Green-Tag Acceptance Notice" (County) or an "Electric Service Release" (City) before service can be connected.

E.) BVES requires a **2" min.** rigid galvanized steel riser that exceeds NEC requirements due to snow load conditions.

F.) Any riser greater than 3', or service drop exceeding 100', requires that the riser be braced. (See Guying Specifications on the the next page.)

G.) Minimum clearance required (other):
1.) **Min. meter height, to be between 5'4" & 6'** above ground (middle of meter).
2.) 36" service drop radius clearance is required around around all windows.
3.) Above any walkable surfaces, (patios, decks, walkable roofs, stairways) a min. of 8' vertical clearance is required, and 12' over driveways and pedestrian access.
4.) **Min. of 3' radius clearance** (around weatherhead), above the top of doorways.
5.) Maintain a 3' clear, level, and unobstructed workspace in front of electric service equipment.

H.) BVES Grounding Requirements: BVES requires, in addition to NEC, a separate grounding conductor and ground rod. Residential Grounding conductor is to be:
100 Amp - #6 Copper (shielded)
200 Amp - #4 Copper (shielded)
400 Amp - 1/O Copper (shielded)
For any panel larger than 200 amps, contact BVES Engineering Department.

I.) ***Maximum service height to be 23' to the top of the weatherhead on level terrain.***
NOTE: BVES requires that access to the riser be maintained and any exceptions must be approved by a BVES Engineering Representative.

J.) Temporary jumpers and meter rings must be removed from service panel prior to service installation.
Contact BVES Engineering Department or Operations for any situation that exceeds these requirements.

K.) BVES follows the County of San Bernardino specifications for electrical panel interrupting ratings: (See Short Circuit Current Table.)

L.) All points-of-service drop attachments shall be on the wall, roof edge, verge, or exterior frame member nearest and facing the BVES pole line.
The service head, wherever practicable, should be located one foot above the level of the point provided for service drop attachment. (see alternative mast guying examples diagram). Drip loops and connections shall be formed below the service entrance weatherhead to prevent the entrance of moisture into the service conduit.
Please Note: For service requirements that exceed these standards, please contact a BVES Engineering Representative.

BEAR VALLEY ELECTRIC SERVICE			
DATE: 03-25-14	TITLE: OH SERVICE SPECS		
PAGE 1 OF 2	DRWN: PF APVL: JN	DRAWING No. 02-0001	REV 2

Bear Valley Electric Service
P.O. BOX 1547 42020 GARSTIN DR BIG BEAR LAKE, CA. 92315
A Division of Golden State Water Company
Telephone: (909) 866-4678
Engineering and Trench Inspections: Ext. #141
Service Connection & Scheduling: Ext: #161
Website: www.bves.com

GAS AND ELECTRICAL METER CONFIGURATION

DETAIL 1

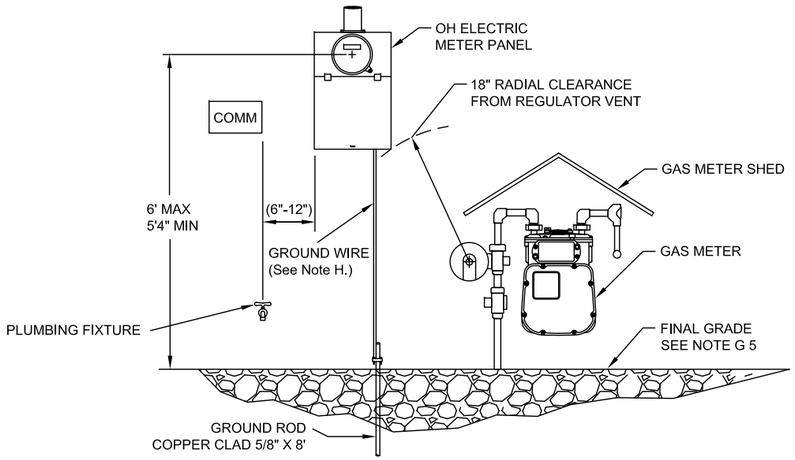

DETAIL 2

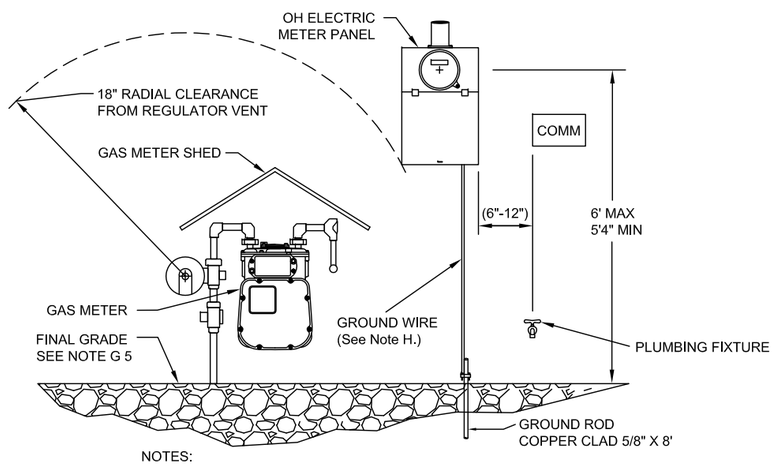

NOTES:
1. Size and dimensions of panels will vary. Drawing not to scale.
2. This Drawing Pertains to both overhead and underground electric service applications.

Bear Valley Electric Service
P.O. BOX 1547 42020 GARSTIN DR BIG BEAR LAKE, CA. 92315
A Division of Golden State Water Company
Telephone: (909) 866-4678
Engineering and Trench Inspections: Ext. #141
Service Connection & Scheduling: Ext: #161
Website: www.bves.com

SHORT CIRCUIT CURRENT TABLE

SERVICE	PHASE	SERVING VOLTAGE	SERVICE ENTRANCE AMPACITIES	UTILITIES CONTRIBUTION TO FAULT CURRENT WILL NOT EXCEED
Residential	Single	120/240	600 or less	10,000
Commercial	Single	120/240	600 or less	42,000
Commercial	Three	120/208 or 240	800 or less	42,000
Commercial	Three	480	1200 or less	30,000

Exceptional Cases:

When the application of the above fault current limitation appears too restrictive for new installations, the customer may request the utility to provide the available fault currents for a specific case and location.

All new installations with service voltage or service entrance ampacities larger than those stated above will be handled as individual cases, and BVES Engineering will provide the available fault duty for each installation.

GUY BRACING SPECIFICATIONS:

If the distance between the riser and utility's pole is..	And....	Then..
Less than 100 ft.	Service mast must be 36" above the roof.	Guying is ***not*** required
Greater than 100 ft.	---	Guying ***is*** required

Stiff leg guying is acceptable.

BEAR VALLEY ELECTRIC SERVICE			
DATE: 03-25-14	TITLE: OH SERVICE SPECS		
PAGE 2 OF 2	DRWN: PF APVL: JN	DRAWING No. 02-0001	REV 2